abode

Overflow Filler Kit

Product features:

- Adjustable to suit various thickness of wall
- Choice of inlet direction (left or right)
- Slimline profile
- Custom designed for lower range pressures
- A modern design classic style

Packaged properties:

Box length (mm): 490 **Box depth(mm):** 80

Box width(mm): 205 **Boxed weight (Kg):** 1.0

Includes pop up waste?: No

Additional comments:

Includes plastic installation key tool, 1250mm cut to length overflow pipe

Product dimensions:

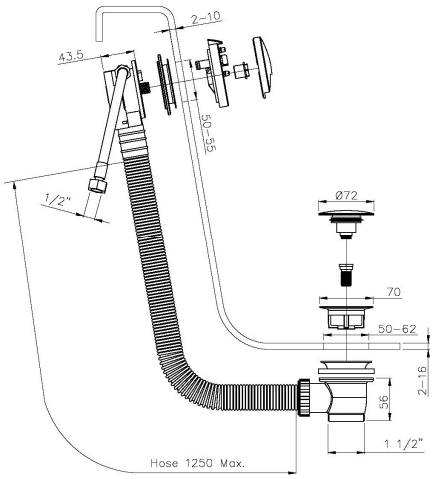

- **Product mounted where:** Surface
- **Recommended hole size:** dia. 50-55 (overflow), 50-62 (waste) mm
- **Overall Height / projection:** 27mm mm
- **Exit reach:** N/A mm
- **Exit height:** N/A mm
- **Base size:** 85 mm
- **Inlet centre distance(s):** N/A mm
- **Min. fitting depth required:** 45 mm
- **Max. surface depth:** 10 (overflow),16 (waste) mm

Product flow characteristics:

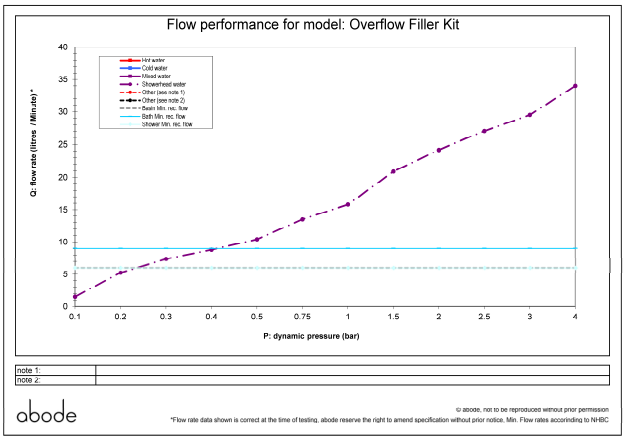

- **Min / Max water pressure (bar):** 0.40* / 5.00
- **Part G max. mixed flow rate at 3 bar (l/m):** 29.5
- **Inlet connection type / length:** Flexi / 200 mm
- **Inlet (plumbing connection) / outlet size:** 1/2" F / 3/8" F
- **Product flow characteristics:** N/A
  Non return valve(s) supplied or position: yes, in body
- **Aerator type:** N/A
- **Control valve type:** N/A (N/A)
- **Includes output diverter?:** N/A
- **Inlet meshed particle filters included:** N/A
- **Shower hose type / length:** N/A / N/A

Warranty Summary (full details available on request):

- Materials and workmanship defects warranted for 5 years
- Valves and working parts warranted for 5 years
- Surface warranty defects warranted for 1 year
- O-rings, hoses & gaskets warranted for 1 year

Care instructions:

- Clean the mixers and showers regularly as required, using soap, do not use any other cleaners.
- Regular cleaning will prevent the build up of lime scale and dirt
- After cleaning rinse thoroughly with clean water to remove any cleaner residue
- Residues of liquid soaps, shampoos and shower foams can also cause damage, so rinse with clean water after using, avoid contact with any abrasives