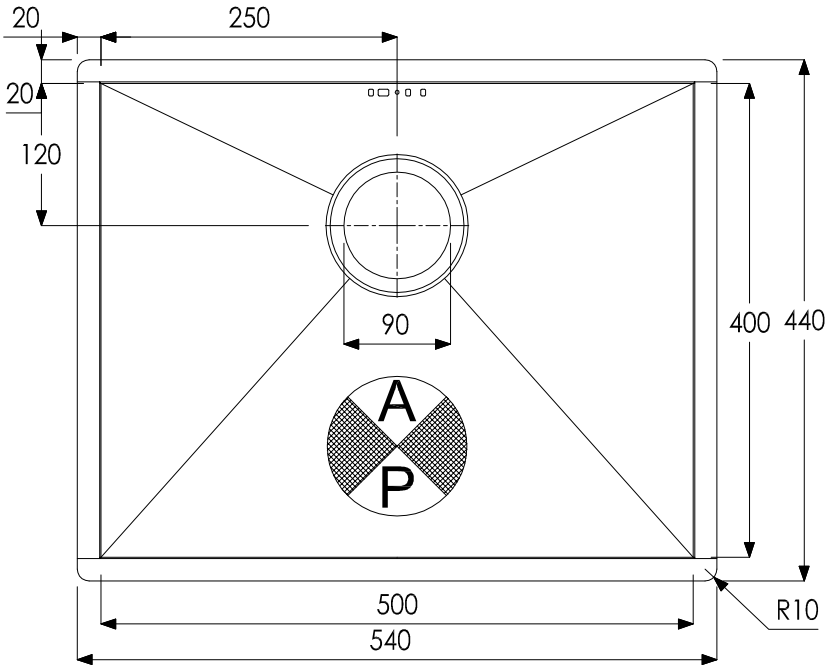

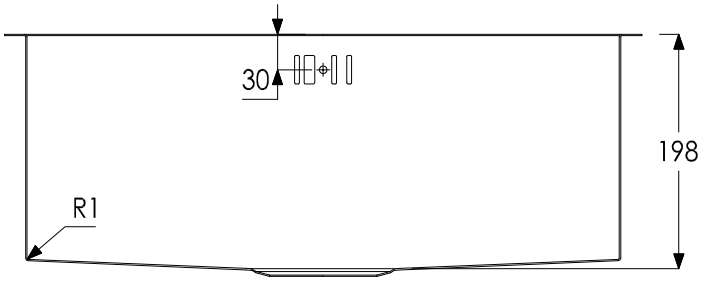
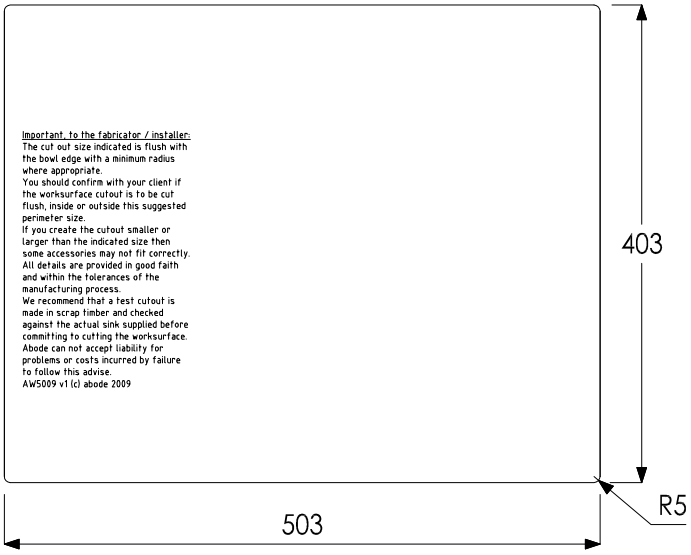
UNDERMOUNT CUT OUT