abode

Bliss

Thermostatic Deck Mounted 3 Hole Bath Mixer & Wall Mounted Shower

Product features:

- Metal construction throughout
- Thermostatic valve for safety & comfort
- Supplied compete with flexible tail pipes for fast simple fitting
- Part G compliant for thermostatic bath fillers
- Factory set maximum output temperature 46°C (adjustable)

Packaged properties:

Box length (mm): 440 **Box depth(mm):** 395

Box width(mm): 255 **Boxed weight (Kg):** 6.6

Includes pop up waste?: No

Additional comments:

Product dimensions:

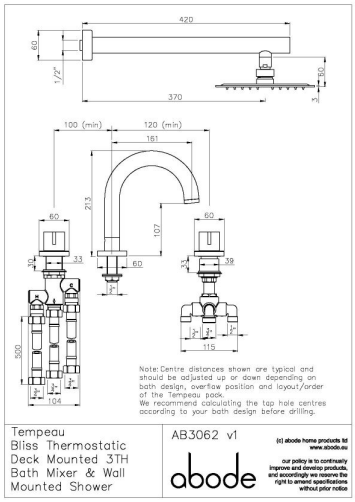

- **Product mounted where:** Deck/Wall
- **Recommended hole size:** 34-40, 22-32, 34-40 mm
- **Overall Height / projection:** 213 mm
- **Exit reach:** 161 mm
- **Exit height:** 107 mm
- **Base size:** 60, 60, 60 mm
- **Inlet centre distance(s):** 100, 120 mm
- **Min. fitting depth required:** n/a mm
- **Max. surface depth:** 30 mm

Product flow characteristics:

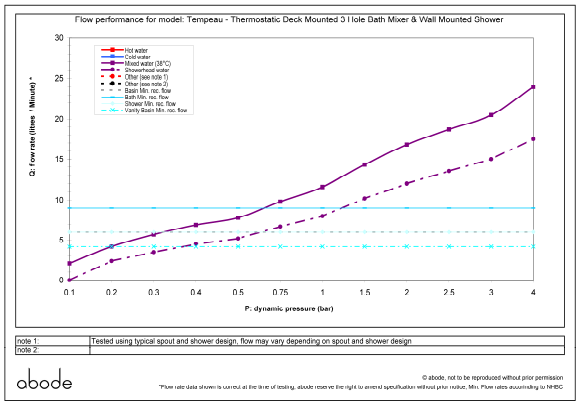

- **Min / Max water pressure (bar):** 0.60* / 5.50
  *Detailed minimum pressure requirements for this product: Bath 0.6, Shower 0.6 (bar)
- **Part G max. mixed flow rate at 3 bar (l/m):** 20.5
- **Inlet connection type / length:** Flexi / 500 mm
- **Inlet (plumbing connection) / outlet size:** 1/2" M & 3/4" M / 1/2" M & 3/4" M
- **Product flow characteristics:** Single Flow

Non return valve(s) supplied or position: H&C Inlet

- **Aerator type:** Flow Straightener
- **Control valve type:** Thermostatic & 180° Divertor ()
- **Includes output diverter?:** Yes
- **Inlet meshed particle filters included:** 0.60 mm

Warranty Summary (full details available on request):

- Materials and workmanship defects warranted for 5 years
- Valves and working parts warranted for 5 years
- Surface warranty defects warranted for 1 year
- O-rings, hoses & gaskets warranted for 1 year

Care instructions:

- Clean the mixers and showers regularly as required, using soap, do not use any other cleaners.
- Regular cleaning will prevent the build up of lime scale and dirt
- After cleaning rinse thoroughly with clean water to remove any cleaner residue
- Residues of liquid soaps, shampoos and shower foams can also cause damage, so rinse with clean water after using, avoid contact with any abrasives